Product Manual

LineRider™ Deluxe
UTV Mounted Airless Line Striper

10005242

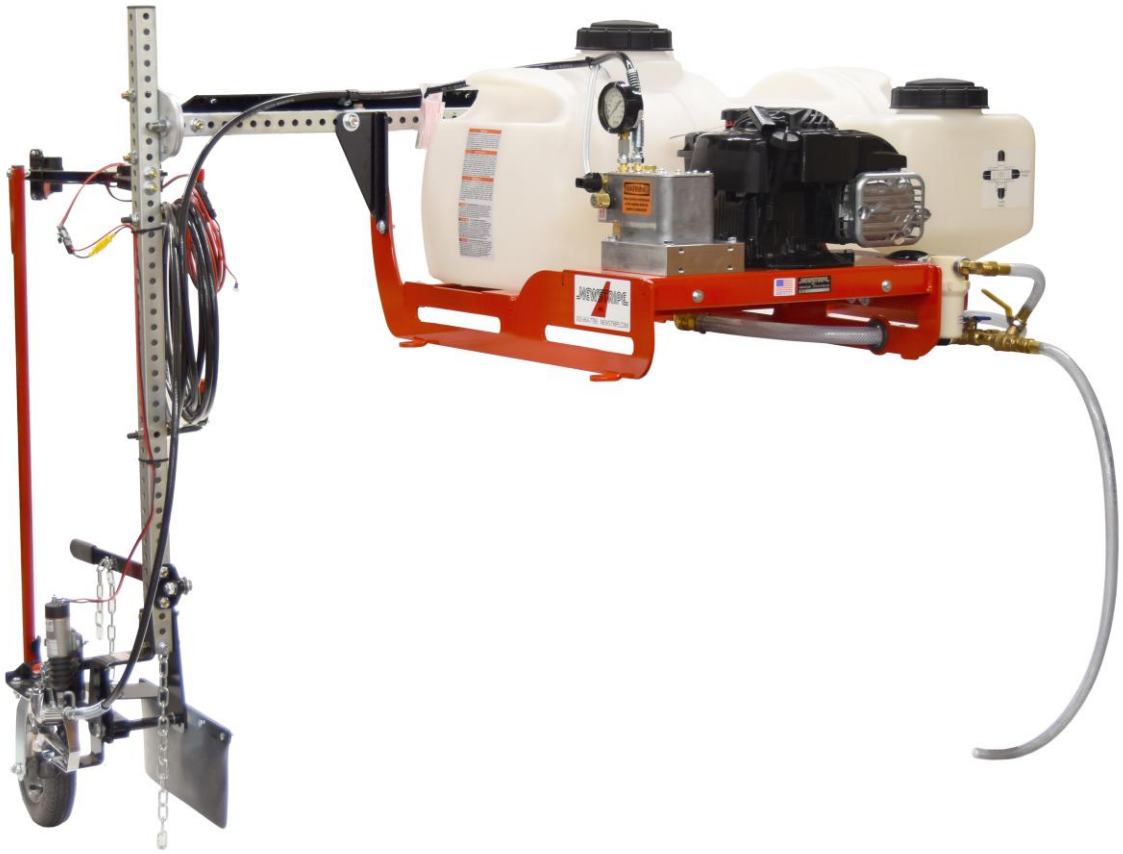

Proudly Made in the USA

Newstripe.com • 303-364-7786

5242.1026

LineRider™ Deluxe UTV Mounted Airless Line Striper

TABLE OF CONTENTS

Precautionary Warnings .....Page 1

Assembly ..... Page 2-3

Operation ..... Page 4-5

Spray Tip Cleaning .....Page 6

Cleaning Procedure .....Page 6

Cleaning Procedure .....Page 7
(Extended Periods or Winter Storage)

Maintenance .....Page 8

Parts List.....Page 9

Detailed Parts Pictures ..... Page 9-10

Airless Pump Detail .....Page 11

Spray Gun Detail.....Page 12

Troubleshooting .....Page 13

Warranty .....Page 14

Thank you for purchasing the Newstripe LineRider™ Deluxe UTV Mounted Airless Line Striper.

Please read over the instructions and make sure you understand the operating procedures before using the unit.

Please check the serial number on your unit. This Manual is for units with serial number 1041679 and above only. For units with serial numbers below 1041679, please contact Newstripe for the correct product manual.

LineRider™ Deluxe UTV Mounted Airless Line Striper

PRECAUTIONARY WARNINGS

- **PLEASE** read and understand all operation instructions as detailed in this manual. Failure to follow specified instructions may result in equipment damage or potential injury.
- **Moving equipment can cause severe injury**. Make sure area is clear of people or obstacles before operation.
- **ALWAYS** stay seated while vehicle is in motion and keep your hands and feet inside the vehicle.
- **NEVER** operate any moving vehicle under the influence of drugs or alcohol.
- **Skin Injection Hazard:** High Pressure Airless spray can inject toxins into blood stream. If injection occurs, seek emergency medical treatment.
- **ALWAYS** release the pressure in the system before changing or cleaning the spray tip.
- **ALWAYS** use a tip guard on the spray gun.
- **ALWAYS** engage the **Trigger Lock on the spray gun** before removing the spray gun for hand operation.
- **NEVER** place your hands or any body parts in front of the spray gun.
- **NEVER** point the spray gun at or spray toward people or animals.
- **NEVER** clean the spray tip while it is attached to the spray gun. Remove the spray tip from the gun to clean the tip guard.
- **NEVER** remove the spray tip from the spray gun while cleaning the pump.
- **NEVER** perform maintenance on the machine while the system is under pressure.
- **NEVER** use pliers to tighten or loosen high pressure fittings on the pump, paint hose, or spray gun.
- **ALWAYS** Use only in a well-ventilated area.
- **ALWAYS** consult your Facility Safety and/or Personnel Department for specified safety protocols prior to operating this equipment.

LineRider™ Deluxe UTV Mounted Airless Line Striper

ASSEMBLY

1. Check for any damage that may have occurred during shipment. Advise Newstripe immediately if you see any damage. Remove all shipping cartons from the pallet.
2. Remove the unit from the pallet and then place it in the bed of the vehicle it is to be used with. Make sure it is positioned square and as close to the front and left bed side of the vehicle as possible.
3. Anchor the unit to the bed of the vehicle with the provided tie down straps. For a stronger or more permanent anchoring, you may mark and drill the bed of the vehicle to anchor the unit, using the tabs on the LineRider chassis.
4. Install the vertical boom rail on the breakaway plate with the two 7/16" x 2-1/2" bolts, and two 7/16" flanged lock nuts provided. Coil the excess spray hose and place it on the top hanger on the vertical boom.

   Note: Use the set of holes in the vertical boom that allows the spray head to ride as level as possible.

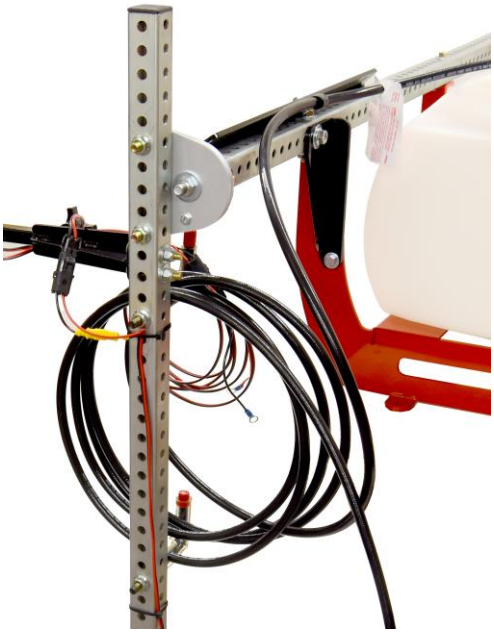

5. Remove the gun mount from the padded envelope and slide it down onto the spray head upright post. Secure it with the receiver tube at about 3" up from the post base by tightening the pinch bolt. Clamp the spray gun in the gun mount as shown, with the actuator bar under the gun trigger. If the gun trigger will not move, release the trigger lock by pushing the lock in from the right side (inside) of the gun.

6. Position the pointer so that the dangle marker will be at the inside of the painted line and then secure it with the star knob. For example, if you are painting a 4" line, the dangle marker should be 2" in from the center of the spray nozzle. Some fine tuning may be needed, so we recommend practicing with water to achieve the desired results before painting. Make sure the static grounding chain hanging from the bottom of the vertical boom rail contacts the ground.

7. The unit may be shipped without engine oil. Always check the oil before starting the engine. Engine capacity is 15 ounces of SAE 5W-30 Full Synthetic Motor Oil with a service grade of SF or higher.
8. Slide the spray control arm into the receiver to the desired position and secure it with the star knob as shown. Plug the switch wiring harness into the main wiring harness at the end of the horizontal rail.

LineRider™ Deluxe UTV Mounted Airless Line Striper

ASSEMBLY CONTINUED

Note: The LineRider is designed to be used with the driver's door off the vehicle for viewing purposes during painting and for ease of entering and exiting the vehicle. You may still use it with the door on the vehicle, but these activities may not be as easy. The receiver for the spray control switch comes pre-installed on the vertical rail. You may move it up or down on the rail for your comfort and suitability.

9. Connect the wiring harnesses to the switch box and your vehicle's 12V battery as shown in the diagram below. You may shorten the battery harness on the ring terminal end to suit your needs if you wish. You will need to install new ring terminals after you shorten it.

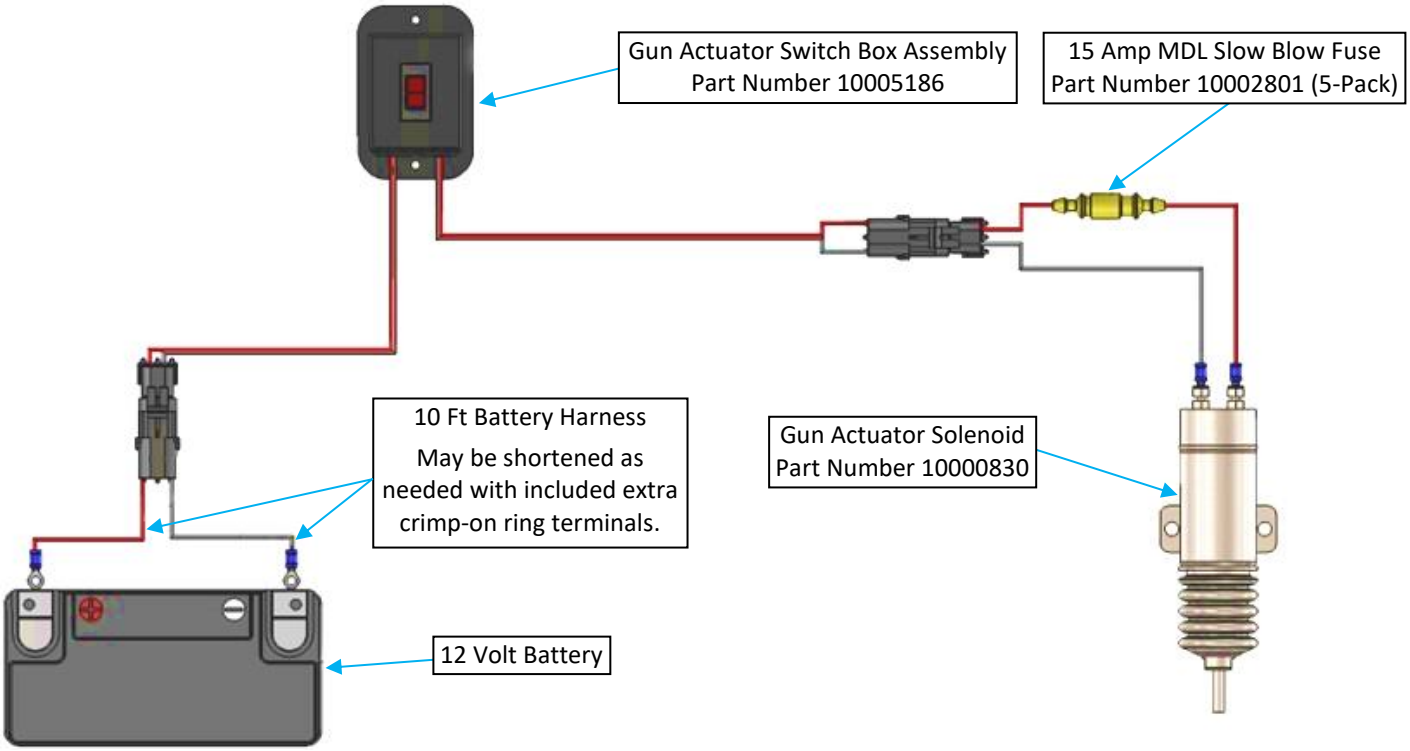

WARNING: The Gun Actuator Solenoid must never be energized if the gun trigger is locked. The solenoid must always be able to retract fully when energized or the solenoid will burn out in less than one minute. The circuit uses a 15 Amp MDL <u>SLOW BLOW</u> Glass Fuse. DO NOT USE A HIGHER AMP FUSE or you may cause damage to your system. Do not operate the solenoid without the vehicle engine running or you may deplete the charge on the battery and damage the solenoid.

LineRider™ Deluxe UTV Mounted Airless Line Striper

OPERATION

1. Fill the fuel tank of the engine with unleaded gasoline (87 or higher octane). Check the engine oil.
2. Ensure that the tank drain valve (located at the right rear of the unit) is closed (handle crosswise to hose). Add 5 to 25 gallons of water or paint to the paint tank and 1 to 2 ½ gallons of water to the purge tank.

   Note: For first time use or after extended periods of non-use, use water to check settings and practice operations. The LineRider is designed to be used with water based athletic field marking paints only. **ALWAYS strain paint before use.**
3. Push the outlet push button 3 times to ensure the outlet valve is moving. The push button is located on the bottom right corner of the pump under the inlet hose.
4. Turn the gold pressure control valve out (counter clockwise) several turns until it spins freely.
5. Turn the prime/spray valve to the prime position. (Circular arrow symbol in-line with arrow on the side of the pump.)
6. Ensure the spray gun trigger lock is disengaged.
7. Ensure the spray gun tip is in the spray position. (The arrow on the spray tip points toward the ground.)
8. Check that the T-handle of the 3-Way tank selector valve (located under the purge tank) is set to the desired position (left to right for the purge tank or front to back for the paint tank).
9. Start the engine and set it to approximately ¾ throttle.

   Note: Do not run the engine at less than ½ throttle or damage to the pump may occur.
10. Turn the gold pressure control valve to high pressure (fully clockwise).
    DO NOT OVERTIGHTEN.
11. With the prime/spray valve in the prime position, fluid should flow through the bypass hose into the paint tank.
12. Let the pump run in the prime position for one minute or until air bubbles dissipate from the bypass hose.
13. Turn the prime/spray valve to the spray position. (Spray gun symbol in line with the arrow on the top of the pump block.)

    Note: A knocking sound should be present at the pump, indicating the pump is reaching the hydraulic relief pressure.
14. Activate the trigger switch and paint will spray from the gun. De-activate the trigger switch to stop the spray.
15. Adjust the pressure by turning the pressure valve knob counter clockwise until the spray pattern decreases, then increase the pressure by turning the knob clockwise just to where you get an even spray pattern.

    Note: Operating the pump at the lowest pressure that produces a quality line can increase the life of the pump.
16. Adjust the spray gun height up or down to obtain the desired line width.
17. **When you are finished spraying or if the machine will be left unattended for any amount of time, turn the prime/spray valve to the prime position, and pull the spray trigger on the spray gun to release the pressure from the system.**

QR Code Link for Bleed Procedure Video

OPERATIONAL NOTES

- If the pump primes and air bubbles continue to appear in the hose after one minute, the suction hose fitting may not be tight enough or the rubber washer may be worn. Turn off the machine, turn the spray valve to prime position, and then pull the spray gun trigger to open the gun and release the system pressure.
- Remove the garden hose fitting at the inlet side of the pump, depress the inlet valve stem to make sure it is free, inspect the washer to make sure it is seated and in good condition. Re-attach the garden hose fitting making sure that it is tight. You may **lightly** snug it with pliers if you continue to get air bubbles. Start the engine and repeat the first steps for operation.
- If the pump will still not prime, back out the pressure control valve knob until it feels loose (several turns) and then turn the Prime/Spray Valve to the prime/re-circulate position. Push the Outlet Prime Button, located at the bottom left corner of the pump, three times. Let the pump run for up to 10 minutes and then turn the pressure control valve knob in clockwise, just until it stops. The pump should now prime. If the pump will still not prime, please call Newstripe.
- **NEVER** use paints or solvents containing halogenated hydrocarbons such as methyl bromine, carbon tetrachloride, or ethyl iodine.
- **WARNING: The Gun Actuator Solenoid must never be energized if the gun trigger is locked. The solenoid must always be able to retract fully when energized or the solenoid will burn out in less than one minute. The circuit uses a 15 Amp MDL SLOW BLOW Glass Fuse. DO NOT USE A HIGHER AMP FUSE or you may cause damage to your system. Do not operate the solenoid without the vehicle engine running or you may deplete the charge on the battery and damage the solenoid.**

LineRider™ Deluxe UTV Mounted Airless Line Striper

SPRAY TIP CLEANING DURING USE

1. Place the prime/spray valve in the prime position and pull the spray trigger on the spray gun to release the pressure on the system.
2. Reverse (turn) the spray gun tip 180 degrees to the tip cleaning position. (The spray tip arrow pointed toward the gun.)
3. Turn the prime/spray valve to the spray position. Point the gun away from you at the ground or into a waste container and trigger the spray gun. This should clear the spray gun of any blockages. Turn the prime/spray valve to the prime position and trigger the spray gun to release the pressure on the system.
4. Turn the spray gun tip back to the spray position (spray tip arrow pointed at the ground).
5. Turn the prime/spray valve to the spray position, and resume spraying.
6. If the spray tip appears to be clean and gun will not spray properly, release the pressure on the system as previously described and check the spray gun filter located in the spray gun handle. The filter can be cleaned with soap and water, however, if the filter is too clogged or dirty to clean, it must be replaced.
7. If the spray gun is still clogged, proceed to cleaning procedures below.

CLEANING PROCEDURE

1. The LineRider is equipped with an onboard purge tank that holds up to 2 ½ gallons of water.
2. Turn the T-handle of the 3-Way tank selector valve (located under the purge tank) so it is left to right for feeding from the purge tank.
3. Turn the prime/spray valve to the prime position.
4. Start the engine and watch the return hose until fluid returning to the paint tank runs clear.
5. Turn the prime/spray valve to the spray position and trigger the gun until spray runs clear. When finished turn the prime/spray valve to the prime position and trigger the spray gun to relieve the system pressure.
6. Clean spray tip if needed with a nylon bristle brush. **DO NOT** use brushes with metal bristles or any metal object to clean the spray tip of dried paint. Replace the tip if it cannot be cleaned.
7. If the spray tip appears to be clean and the gun will still not spray, check the spray gun filter located in the handle of the spray gun. If the filter cannot be cleaned it must be replaced.
8. Drain the paint tank of any unused paint. You may now rinse the inside of the paint tank.

   Note: You may want to place the machine on a slight incline, so that the drain valve is at the lowest point.
9. Disconnect the hose from the pump inlet valve and install the *Pump Defender* elbow fitting assembly (included with machine) on the pump inlet valve with the elbow facing upward. Fill the fitting assembly with *Pump Defender* to the top of the white elbow.

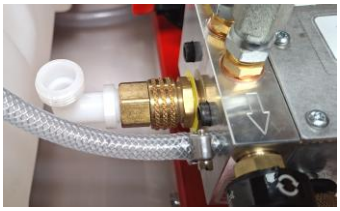

10. Leave the engine off and the prime/spray valve in the prime position. Pull the recoil starter until you see *Pump Defender* appear in the return hose and until it is gone from the fitting elbow. You may now remove the fitting assembly and reconnect the feed hose.
11. Check the in-line pump filter once a week. (White or black plastic filter at the back of the unit). With the purge tank empty, turn the t-handle of the 3-Way tank selector valve so it is left to right. (feeding from the purge tank).
12. Unscrew the filter bowl. Clean the filter bowl and filter screen and then reinstall them on the filter housing.

    Note: There is a rubber O-ring gasket that goes between filter bowl and the filter housing. Check that it is in place when reinstalling the filter bowl and screen. **Hand Tighten Only.**

LineRider™ Deluxe UTV Mounted Airless Line Striper

CLEANING FOR EXTENDED PERIODS OF NON-USE OR FREEZING CONDITIONS

1. Clean as instructed in Cleaning Procedures and empty the paint tank, all lines, the purge tank, and the filter bowl completely of water or paint.
2. Turn the T-handle of the 3-Way tank selector valve (located under the purge tank) so it is left to right for feeding from the purge tank.
3. Pour one bottle of *Pump Defender* into the purge tank.
4. Place the prime/spray valve in the prime position and start the engine. Allow the pump to prime just until you see *Pump Defender* in the return hose.
5. Place the prime/spray valve in the spray position and trigger the spray gun until you see *Pump Defender* liquid spray from the gun. Once liquid starts spraying from the gun quickly release the trigger.
6. Repeat the procedure with the *Pump Defender* if necessary. Return the prime/spray valve to the prime position and then shut off the engine.
7. Trigger the spray gun to release any pressure from the system.
8. Remove as much fuel from the engine gas tank as possible or add fuel stabilizer to fuel.
9. It is best to run engine until it runs out of fuel, or at least long enough (5-10 minutes) for the stabilized fuel to fill the carburetor.
10. The unit may now be stored for extended periods of no-use or freezing conditions.

PRECAUTIONARY WARNINGS

- **ALWAYS** release pressure in the system before changing or cleaning the spray tip. Place the prime/spray valve in the prime position, turn off the machine and squeeze spray trigger to release pressure.
- **NEVER** use fuels such as gasoline to clean the equipment.
- **NEVER** use solvents containing halogenated hydrocarbons such as methyl bromine, carbon tetrachloride, and ethyl iodine.
- **DO NOT** attempt to clean a clogged gun filter. You must replace it.
- **DO NOT** use brushes with metal bristles or any metal object to clean the spray tip of dried paint. Replace the tip if it cannot be cleaned.

LineRider™ Deluxe UTV Mounted Airless Line Striper

MAINTENANCE

ITEM	CHECK	MAINTENANCE ACTION
Engine Oil 5W-30 Full Synthetic	Before each use	Add oil as needed. Engine oil changes are not required per the engine manufacturer.
Spray Pump	Before and after each use	Use Pump Defender every time you store the machine
Pump Inlet Hose	Before each use	Replace if nicked or has cuts
Spray hose	Before each use	Replace if nicked or has cuts
Bypass (Return) Hose	Before each use	Replace if nicked or has cuts
Spark Plug & Air Filter	Every 4 Months	Clean or change as needed
All pivot points	Before each use	Lubricate all pivot points with light machine oil
Spray Tip	Before each use	Replace if the spray pattern becomes uneven or if tip becomes worn
Inline Filter	Clean weekly	Replace the screen if damaged or clogged Replace the gasket if worn or damaged
Spray Gun Clamp	Check weekly	Lubricate the clamp with light machine oil
Spray Gun Filter	Check monthly	Replace if filter becomes clogged. Every 50-250 gallons
Engine Air Filter	Check monthly	Replace when dirty
Pump Outlet Valve and Pump Outlet Push Button	Before each use or if pump does not prime	Replace every 1000-1500 gallons or if bad or is leaking (Always Replace Both Together)
Pump Inlet Valve	If pump does not prime	Replace every 1000-1500 gallons or if bad
Pump Inlet Hose Washer	Pump losing pressure or will not prime	Replace washer every 100-250 gallons or if damaged
Pump Prime/Spray valve	Before each use	Replace every 1000-1500 gallons or if it stops working or is leaking
Filter Bowl Gasket	If leaking or if the pump will not prime	Replace if worn, damaged, or missing
General Cleaning	As needed	Clean with soap and water only. **DO NOT** use high pressure power washers or solvents.

ENGINE LUBRICANT AND PARTS

ITEM	SPECIFICATIONS
Engine	Briggs & Stratton 550EX Series (Part Number 10004608)
Oil Capacity	15 Ounces (0.44 Liters) Full Synthetic SAE 5W-30
Spark Plug	Briggs & Stratton 692051 (550EX Series Engine) Briggs & Stratton 594056 (EXi 725 Series Engine)
Air Filter	Briggs & Stratton Part# 593260 (Part Number 10004969)

LineRider™ Deluxe UTV Mounted Airless Line Striper

PARTS LIST

Item	Description	Part Number
#1	Briggs & Stratton 550EX Engine	10004608
#2	Engine Air Filter (Not Shown)	10004969
#3	.44 GPM Airless Pump	10005238
#4	25 Gallon Paint Tank Assembly	10004955
#5	Replacement Paint or Purge Tank Lid	10004647
#6	Purge Tank With Lid	10003198
#7	Hose Assembly, Tank Outlet	10002318
#8	Hose Assembly, Drain	10002326
#9	Hose Assembly, Purge Feed	10002775
#10	Hose Assembly, Manifold	10002776
#11	Hose Assembly, Pump Feed	10002777
#12	Hose, Pump Return	10002781
#13	Hose, 25' Airless Spray	10000458
#14	In-Line Filter	10000369
#15	Screen For In-Line Filter (Not Shown)	10000100
#16	Gasket For In-Line Filter (Not Shown)	10001543
#17	½" Full Port Ball Valve (Drain)	10004110
#18	½" 3-Way Valve Assy (Tank Selector)	10004526
#19	Star Knob (2)	10000007
#20	Horizontal Boom Rail	10005173
#21	Vertical Boom Rail	10005174
#22	Vertical Boom Rail Breakaway Plate	10005175
#23	Hose Hanger With Cover and Nut (2)	10005164

Item	Description	Part Number
#24	Gun Actuator Solenoid	10000830
#25	Gun Actuator Harness Assy. With Fuse	10005204
#26	Gun Actuator Fuse 5-pk **(Do Not Substitute)**	10002801
#27	Gun Lift Handle	10005183
#28	Gun Lift Hande Mounting Bracket	10005184
#29	Gun Lift Handle Catch	10005185
#30	Gun Actuation Switch Box Assembly	10005186
#31	Illuminated Red Gun Control Rocker Switch	10000954
#32	Gun Mount Lift Chain	10005187
#33	Grounding Chain	10005188
#34	Spray Head	10005161
#35	Spray Head Rigid Caster	10000952
#36	Spray Head Overspray Flap	10004967
#37	Gun Mount Assembly	10002733
#38	Airless Gun Mount Clamp Assembly	10005152
#39	Airless Spray Gun With 419 Spray Tip	10005211
#40	Airless Gun Tip Guard (Included w/ Gun)	10005116
#41	419 Airless Spray Tip (Included w/ Gun)	10005230
#42	Line Guide	10005189
#43	Line Guide Bracket	10005198
#44	Line Guide Dangle	10005206
#45	AX25 V-Belt (Not Shown)	10003940

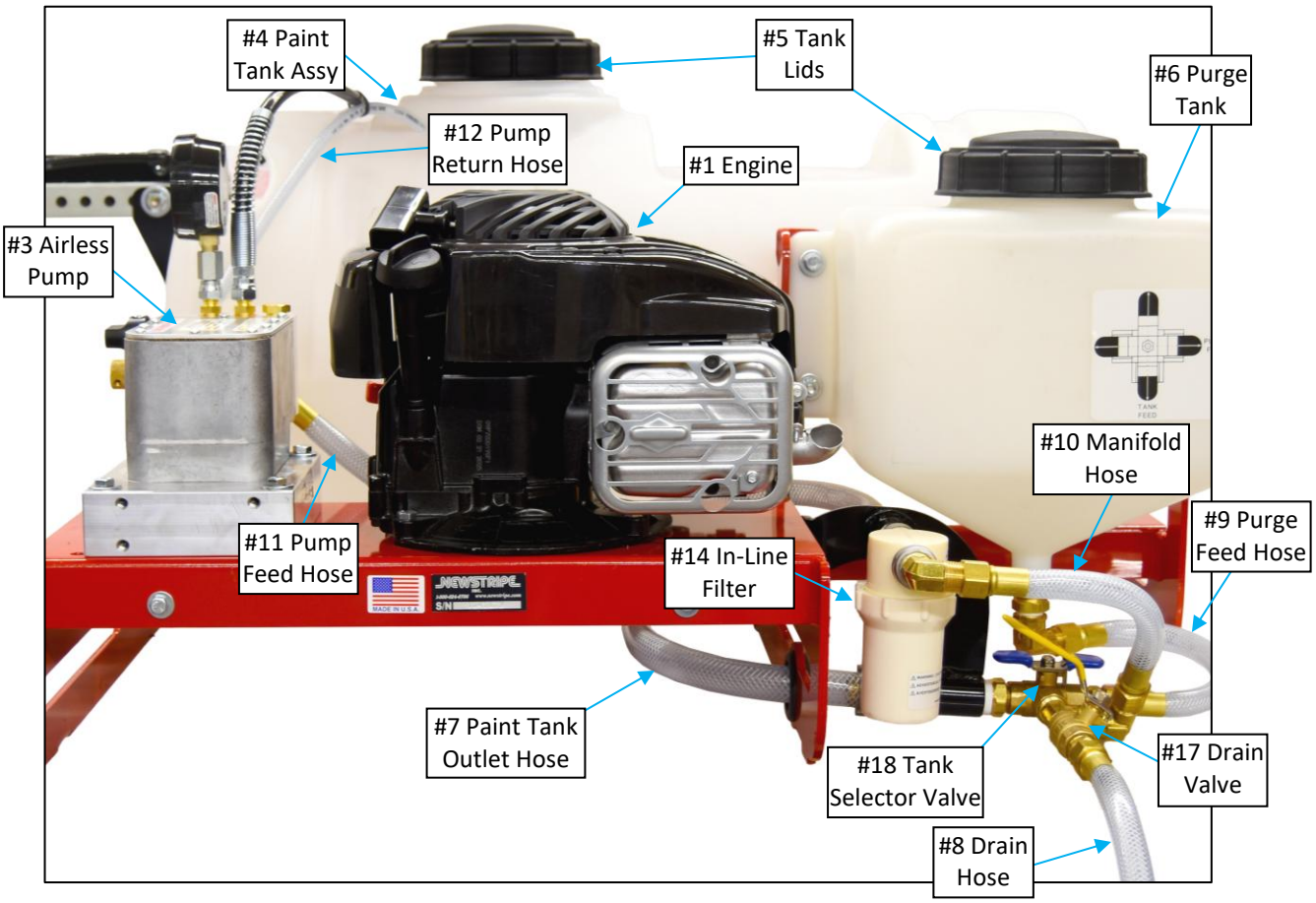

LineRider™ Deluxe UTV Mounted Airless Line Striper

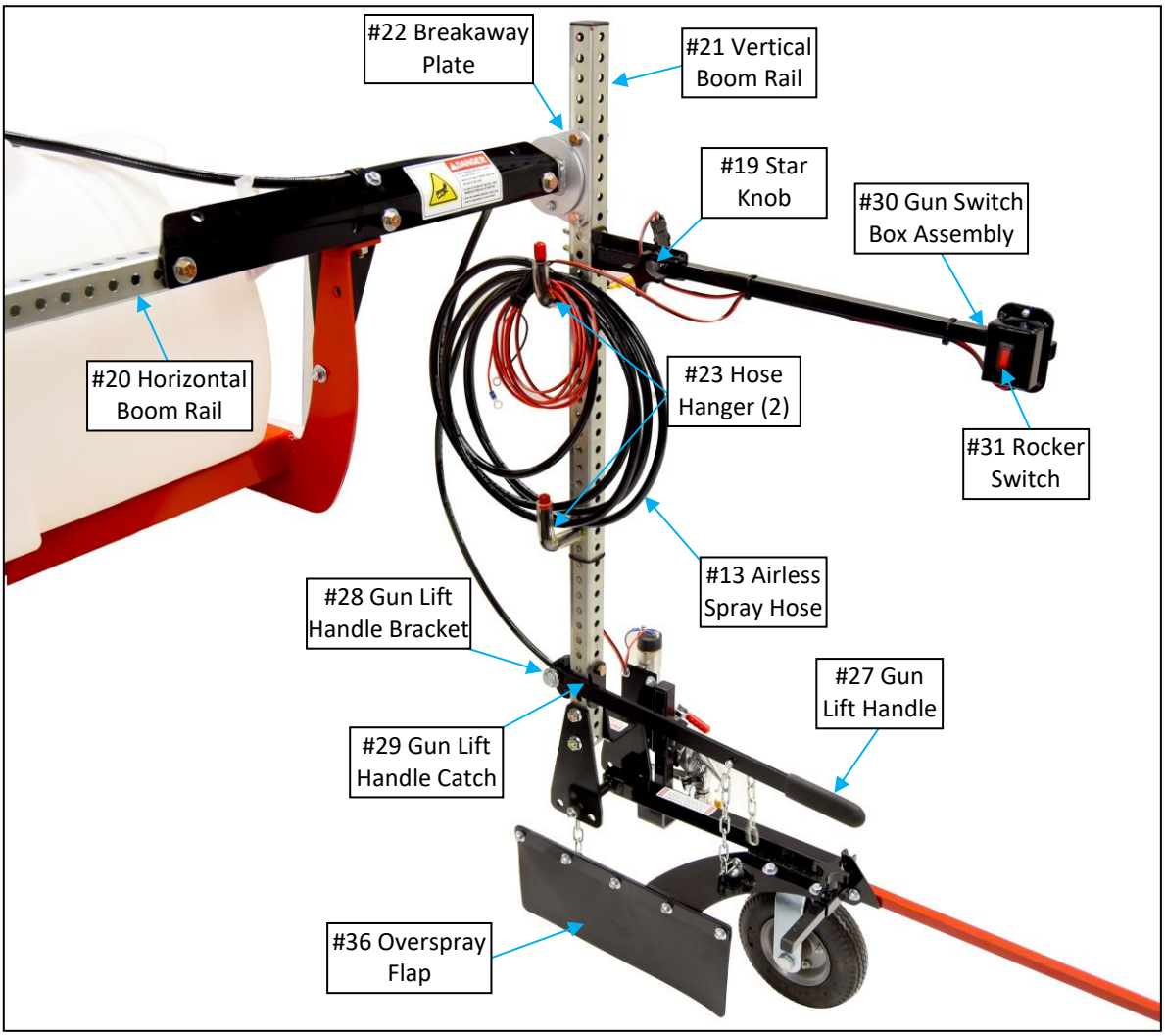

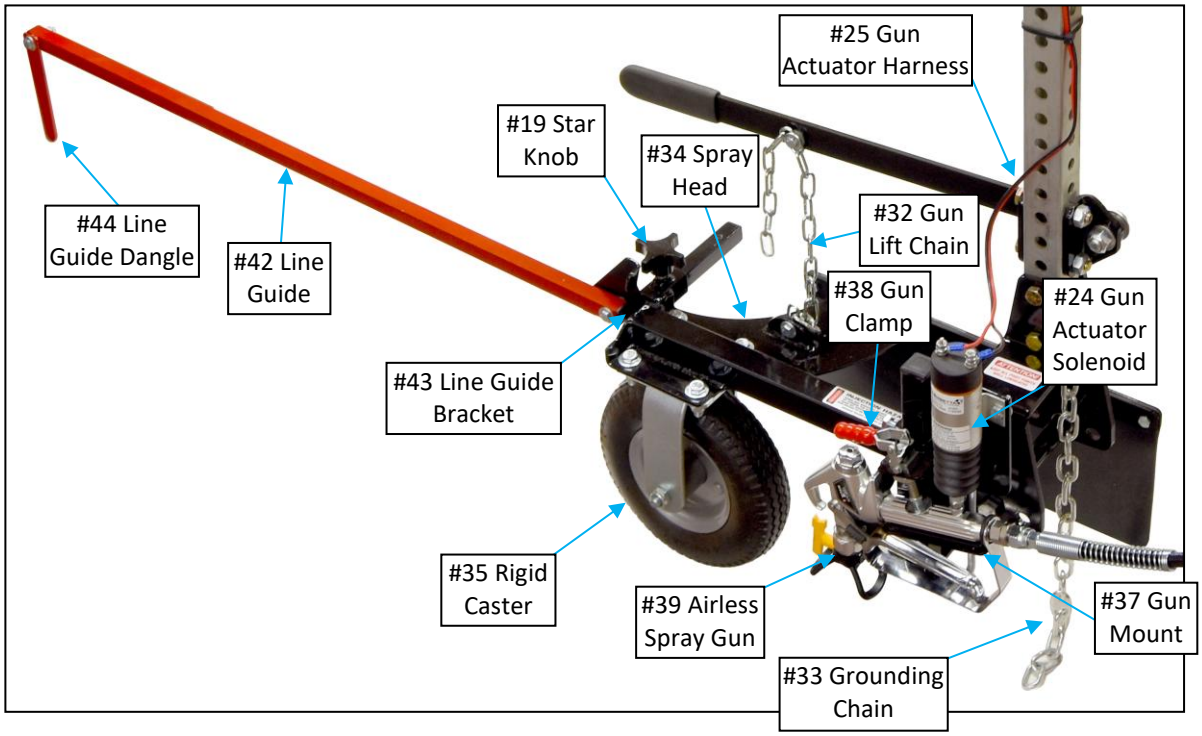

LineRider™ Deluxe UTV Mounted Airless Line Striper

AIRLESS PUMP PARTS

Item	Description	Part Number
3	Airless Pump (Includes Below Parts)	10005238
45	Pressure Control Valve	10000380
46	Inlet Valve	10002745
47*	Outlet Push Button *Available in Outlet Valve & Push Button Kit ONLY	10005102
48*	Outlet Valve *Available in Outlet Valve & Push Button Kit ONLY	10005102
49	Prime Spray Valve	10004000
50	Gauge Kit, 0-5000 psi	10003469

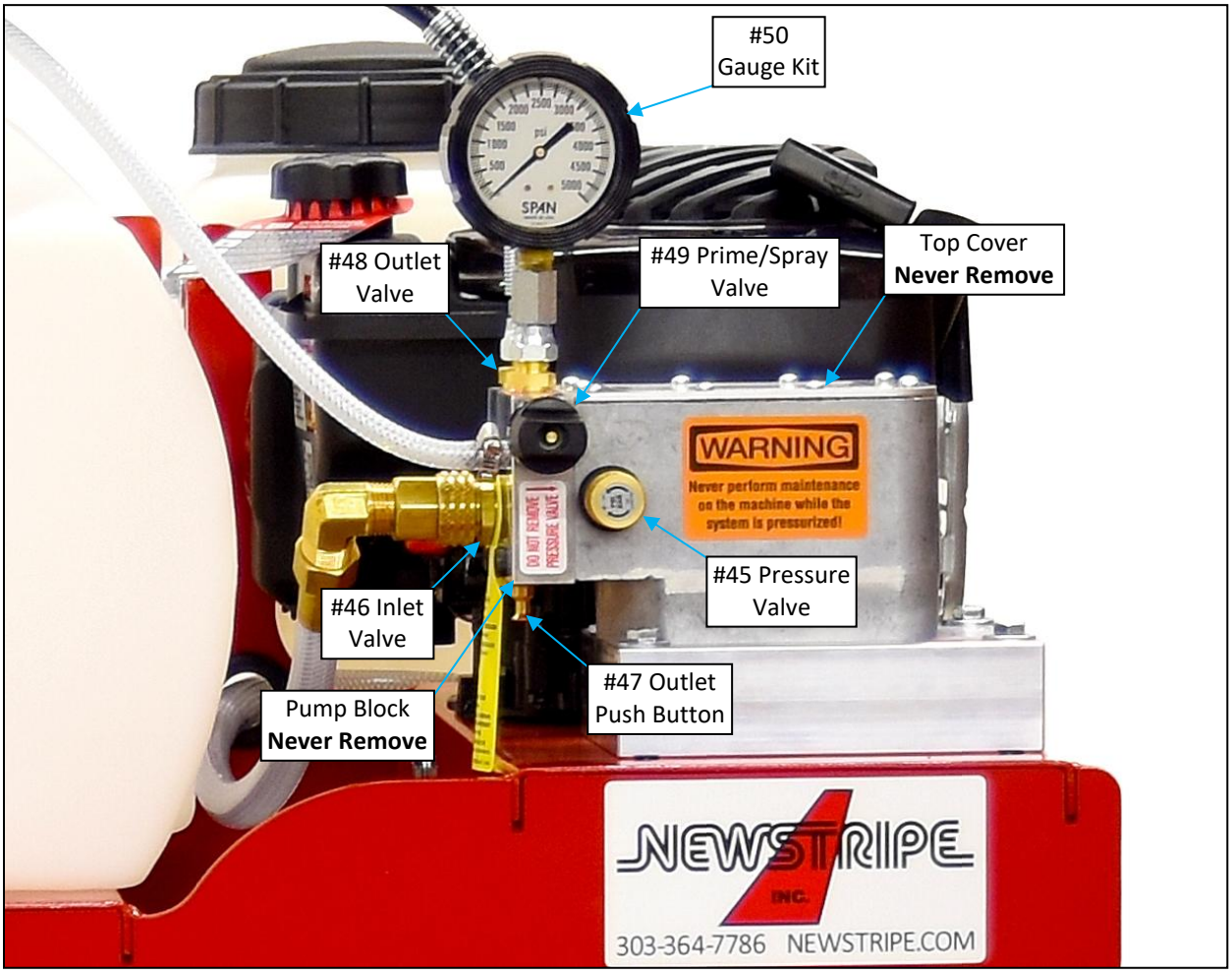

LineRider™ Deluxe UTV Mounted Airless Line Striper

AIRLESS SPRAY GUN DETAIL

Item	Description	Part Number
1	Spray Tip Guard	10005116
2	419 Spray Tip w/Seals – Standard For All Airless LineRider Stripers	10005230
	617 Spray Tip w/Seals – Standard For All Walk Behind Stripers	10005231
	619 Spray Tip w/Seals – Standard For NewRider Ride-On Stripers	10005151
	621 Spray Tip w/Seals – For Wider Lines Than 617 & 619 Spray Tips	10005232
3	Spray Tip Seal Kit – Package Of 5	10005119
4	7/8" Diffuser Assembly	SEE # 9
5	Needle Assembly	SEE # 9
6	Lock Nut	SEE # 9
7	50 Mesh Gun Filter 2pk – Standard Filter For All Striping Machines	10000641
	30 Mesh Gun Filter 2pk – Optional Coarse Filter For All Striping Machines	10004384
8	Swivel Inlet Fitting Kit	10005135
9	Airless Spray Gun Repair Kit (Includes Item Numbers 4, 5, and 6)	10005117

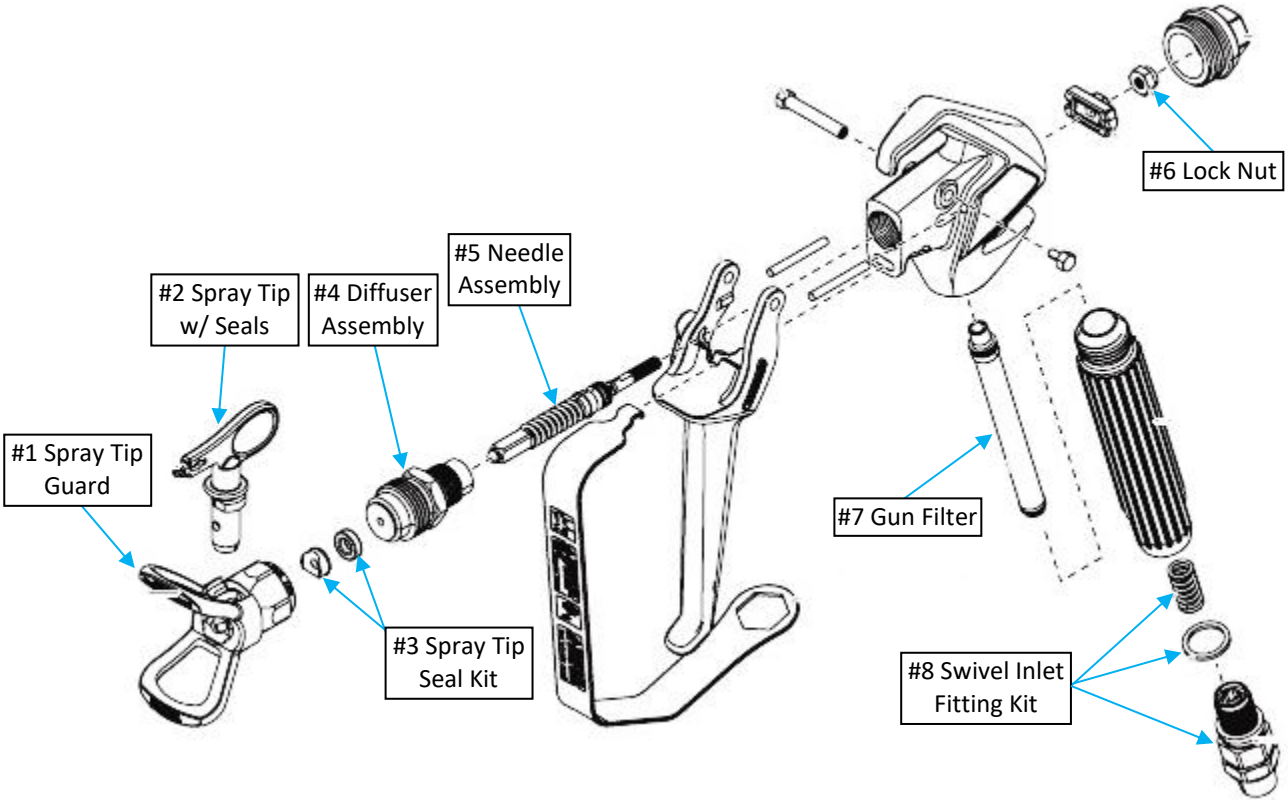

LineRider™ Deluxe UTV Mounted Airless Line Striper

TROUBLESHOOTING GUIDE

NEVER REMOVE THE FRONT COVER, PRESSURE ADJUSTING VALVE OR THE PUMP HEAD BLOCK.
***THIS WILL VOID THE WARRANTY.* CALL NEWSTRIPE FOR SERVICE LOCATIONS IF THESE ITEMS REQUIRE SERVICE.**

PROBLEM	REMEDY
The engine will not start.	Check that the throttle lever is in the full run position (lever pulled toward you). Check that the fuel tank has adequate fresh fuel. Call Newstripe for assistance.
The engine starts but runs rough.	Check for proper fresh fuel. Check the spark plug for fouling. Clean or replace the spark plug if needed. Check air filter to make sure it is not dirty or clogged.
The pump will not prime. (No fluid returning to tank)	Check that Prime/Spray control knob is in the Prime position (Circular arrows aligned with the arrow on the pump block). Push the brass outlet valve button three times and ensure that the pressure adjustment valve is turned in fully clockwise.
The outlet valve button has been pushed, and the pressure valve is turned in fully clockwise, but the pump will still not prime.	Turn off the pump and then turn the pressure control knob out counterclockwise several turns until it turns freely. Turn on the pump and run it for 5 minutes. Turn pressure control knob slowly all the way back in. You should start seeing flow in the return hose. The pump should now prime. If you still have no flow, please call Newstripe for assistance.
Fluid is returning to the pail in the bypass/return hose, but air bubbles are still present in the hose after 60 seconds.	Check the inlet hose fitting for tightness, or a worn or missing rubber washer. Check suction the hose for nicks or cuts that would allow air into the system. Call Newstripe for assistance if needed.
The pump primes, but the gun will not spray.	Check that the Prime/Spray control knob is in spray position. Check that the pressure control knob is turned in fully clockwise to high pressure, until it stops. **Do Not Force**. Press the brass outlet valve button three times. Make sure that the spray tip is not obstructed.
All knobs are set correctly on the pump, but the gun still does not spray.	Check that the trigger lock on the spray gun is disengaged. Check that the spray tip arrow is pointing toward the ground. Check that the gun trigger handle is operating the spray gun.
All of above are correct, but the gun will still not spray.	Turn the Prime/Spray control knob to the prime position, turn off the engine, and pull the spray gun trigger to release the pressure in the system. Check the spray gun filter and replace it if it is plugged. Call Newstripe for assistance if needed.
Overspray or too much paint.	Lower the spray pressure by turning spray pressure control knob counterclockwise several turns and then increase the pressure until you obtain a good spray pattern.
Too little paint.	Increase the spray pressure until you obtain a good spray pattern. The paint may need to be thinned some in cooler temperatures or if the paint viscosity is very thick.
Uneven spray pattern or stringing.	Increase the spray pressure. The spray tip may be chipped or clogged. Reverse the tip to clear any obstruction and clean it if necessary.
The pressure has been increased, and tip is clean, but the spray pattern is still not correct.	You most likely have a worn spray tip. Replace the spray tip. Call Newstripe for assistance if needed.

Your machine is designed to be simple and safe to operate.

Please call us at 303-364-7786 if you have any questions during setup, painting, or cleaning.

LineRider™ Deluxe UTV Mounted Airless Line Striper

10005242

36 Month Warranty

Newstripe, Inc. ("Newstripe") warrants to the original purchaser, for 36 (Thirty Six) Months after date of purchase, that the equipment* hereby sold shall be free of defects in materials and workmanship. This warranty does not extend to any damage or malfunction resulting in misuse, neglect, accident, improper operation, or normal wear and tear.

* Gasoline engines, compressors, low pressure pumps, and transaxles are furnished with their respective manufacturers' warranties only and are not covered by any warranty of Newstripe. High pressure pumps manufactured by Newstripe (excluding wear items like diaphragms and valves) are warrantied for materials and workmanship for 12 Months after the date of purchase.

Damage incurred in shipment from Newstripe to the purchaser is the total responsibility of the shipping carrier. The purchaser is responsible for noting any damages on the Bill of Lading of the shipping carrier and Newstripe will work with the shipping carrier to resolve any damages incurred.

The Newstripe obligation under this warranty and any implied warranties is limited to replacement or repair of defective parts of its manufacture without charge for 36 (Thirty Six) Months from date of purchase. For service under this warranty, the purchaser shall obtain an approved Return Materials Authorization (RMA) from Newstripe and then ship the defective part or parts of the equipment, transportation prepaid by the purchaser, to Newstripe together with a written description of any claimed defect and proof of purchase date of the materials being returned. To review Newstripe's complete guidelines for warranty claims and returns, please visit our website at www.newstripe.com.

The responsibilities described above are the only responsibilities of Newstripe under this written warranty or any implied warranty and may be exercised only within 36 (Thirty Six) Months from the date of original purchase. In no event shall Newstripe be liable for incidental or consequential damages and no person had any authority to bind it to any representation or warranty. Newstripe is not responsible for work done, materials furnished, or repairs made by others without its specific written authorization.

This warranty shall be in lieu of any and all other warranties, expressed or implied, including any warranties of merchantability or fitness for a particular purpose, and there is no other representation or warranty of any kind with respect to the goods sold hereby except as set forth herein. It is expressly agreed that this warranty shall be limited to the adjustment, repair or replacement of parts and the labor and services required thereby. In no event, including any claim of negligence, shall Newstripe be liable for incidental or consequential damages.